Adaptive Satellite-based IoT Communication System

The Challenges of the Rub' al Khali

The Rub' al Khali (The Empty Quarter) represents one of the most extreme environments for deploying Internet of Things (IoT) nodes. Due to the total lack of terrestrial infrastructure (GSM/LTE), Satellite Communication is the only viable method for monitoring critical assets like oil pipelines or tracking endangered wildlife.

A Highly Dynamic Environment

The main difficulty lies in the fact that this environment is not just harsh, but highly dynamic:

- Extreme Thermal Fluctuations: Temperatures shift from freezing desert nights to scorching summer days (exceeding 55 C). This drastically increases the Thermal Noise Floor and degrades battery chemistry.
- Satellite Dynamics: Since Low Earth Orbit (LEO) satellites are constantly moving, the distance and the resulting Signal-to-Noise Ratio (SNR) change every second.

The Proposed Solution: Adaptive Modulation

Using a Fixed Modulation scheme in such a volatile environment is inefficient; it either fails when the signal is weak or wastes battery when the signal is strong. my system addresses this by implementing Adaptive Modulation and Coding (AMC):

The system performs real-time sensing of the SNR and Ambient Temperature. It dynamically switches between three modes:

- High-Efficiency Mode (QPSK): Utilized when the link quality is excellent to finish transmission quickly and save energy.
- High-Reliability Mode (BPSK): Utilized when the link quality drops to ensure the data packet is delivered despite high noise.
- Smart Sleep Mode: If the link quality is too poor for any successful transmission, the system intelligently enters a deep sleep state to prevent wasting battery on guaranteed-fail attempts.

Final Objectives & Value Proposition

- Maximum Reliability: Ensuring that critical data reaches the gateway under the most challenging atmospheric conditions.
- Enhanced Battery Autonomy: By minimizing the "Active Duty Cycle" and avoiding the "Retransmission Penalty," the system extends the operational life of the sensor nodes to several years.

System Implementation (Simulink & MATLAB)

The Physical Layer (Simulink)

To realize the proposed modes, two manual modulation circuits were designed:

- BPSK Modulator:

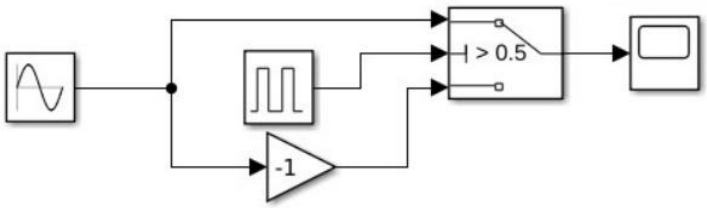

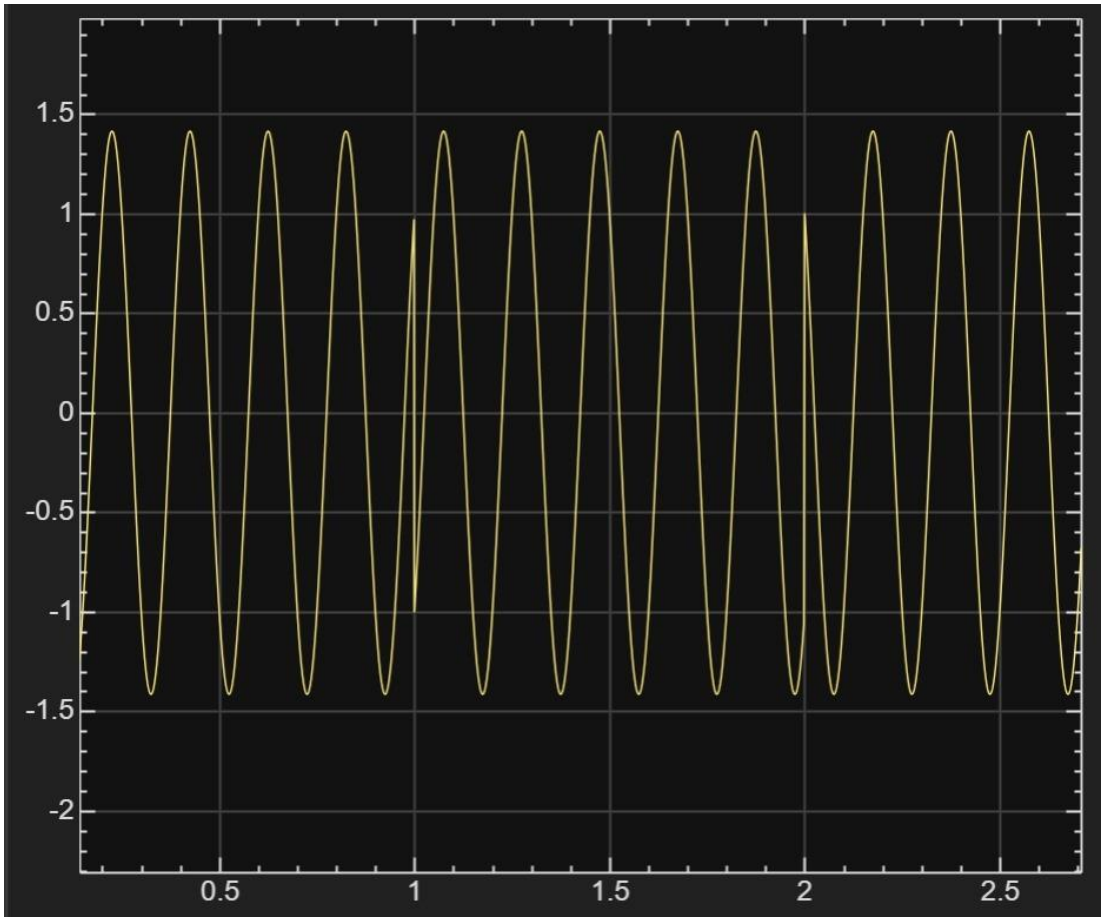

- QPSK Modulator:

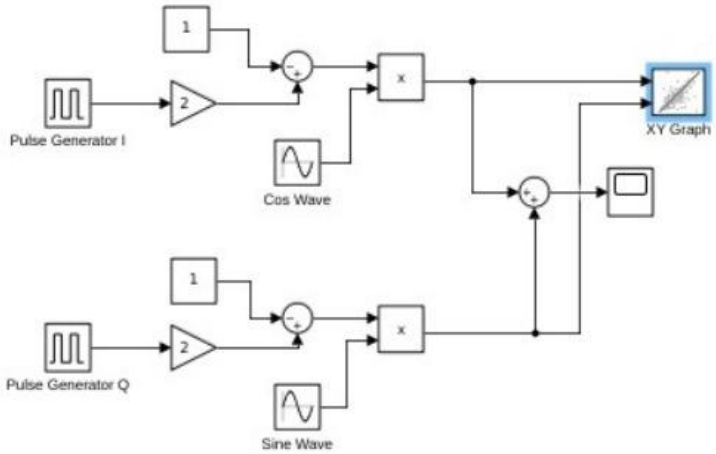

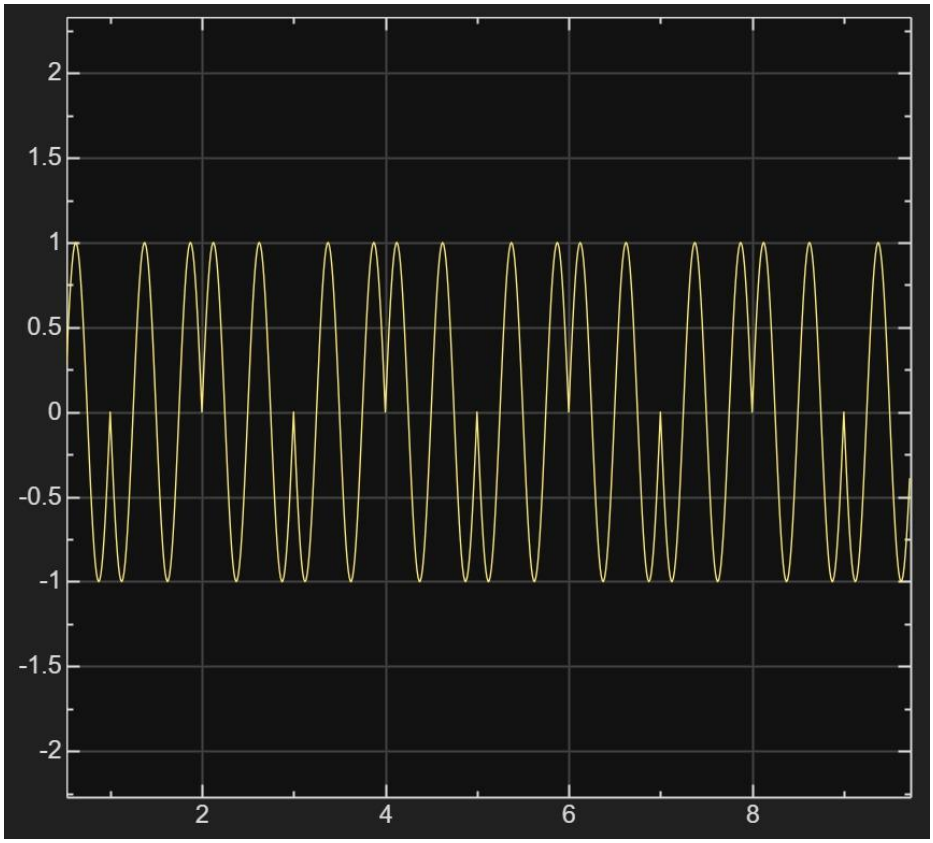

The Control Layer (MATLAB Dashboard)

A smart algorithm calculates the link budget dynamically using:

- Free Space Path Loss (FSPL): Variable distance based on satellite position.
- Dynamic Noise Floor (kTB): Increasing noise floor based on desert heat.
- Retransmission Penalty: Factoring The energy drain for failed attempts.

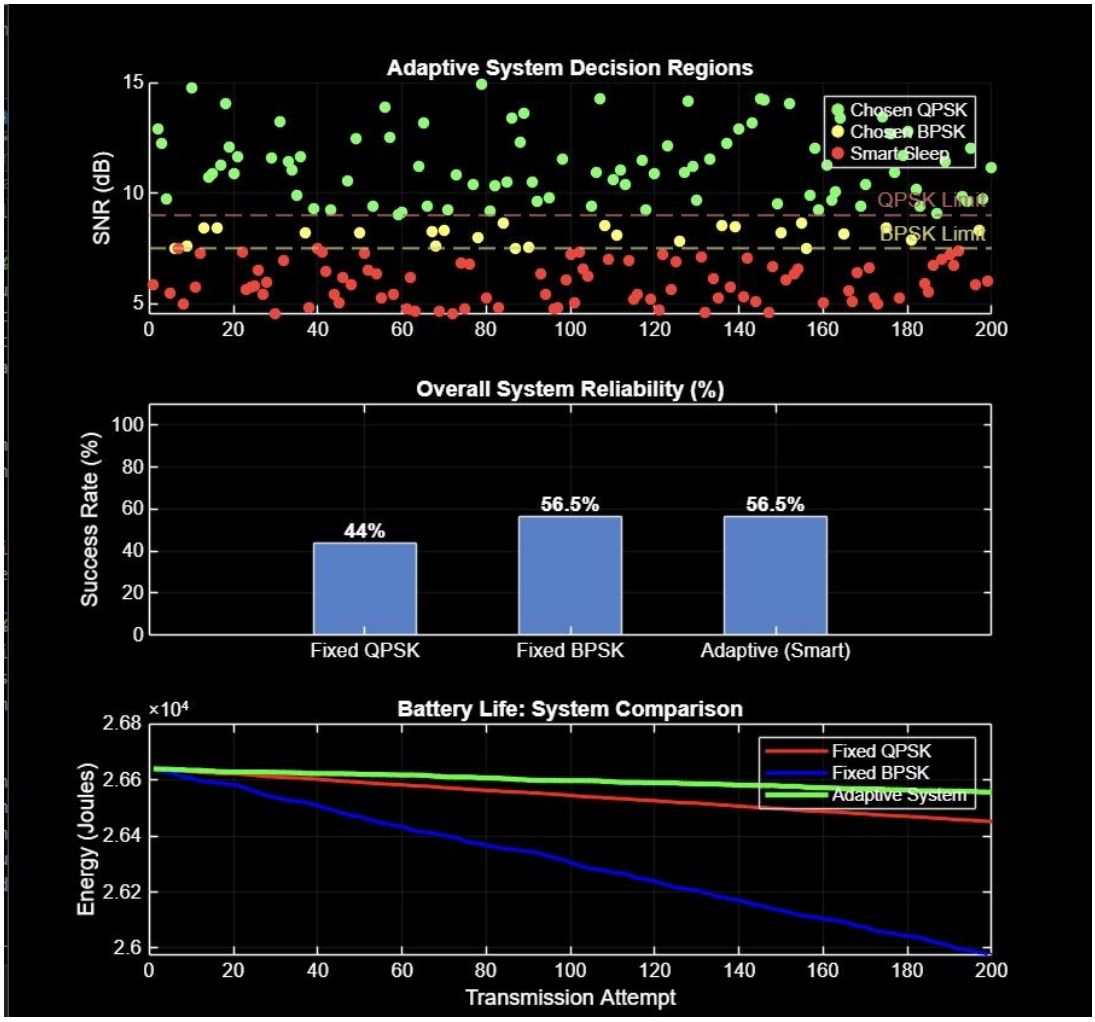

Performance Results

Reliability (vs. Fixed QPSK)

- Result: The Adaptive system achieved 56.5% reliability, outperforming Fixed QPSK by ~28%.
- Reason: Intelligent switching to BPSK prevents packet drops during low SNR.

Energy Efficiency (vs. Fixed BPSK)

- Result: The Adaptive system doubles the battery life compared to Fixed BPSK.
- Reason: Utilizing fast QPSK bursts reduces transmission time from 4s to 1s, avoiding the heavy power drain of BPSK.

Key System Assumptions

1. Communication & Link Budget

Orbit Type: The system is designed for Low Earth Orbit (LEO) satellites, with altitudes ranging from 600 km to 2000 km.

Path Loss Model: Signal degradation is calculated based on the Free Space Path Loss (FSPL) model in a harsh desert environment.

Hardware Gains:

Transmitter 5 dBi (standard IoT node).

Receiver 35 dBi (high-gain satellite antenna).

Transmission Power: A low-power output of 4 dBm is assumed to maximize device longevity.

2. Adaptive Modulation Logic

Switching Thresholds: * BPSK: Activated at a minimum SNR of 7.5 dB for robust, long-range connectivity.

QPSK: Activated at a minimum SNR of 9 dB to achieve higher data rates when signal quality is optimal.

Timing Efficiency: QPSK reduces transmission time by 75% (1s vs 4s for BPSK), significantly lowering the energy-per-bit consumption.

Reliability Protocol: A Retry Penalty factor is integrated to account for the energy overhead of failed packets and re-transmissions.

3. Power & Energy Management

Battery Specifications: A standard 3.7V / 2000 mAh Li-ion battery is used as the primary power source.